HSF

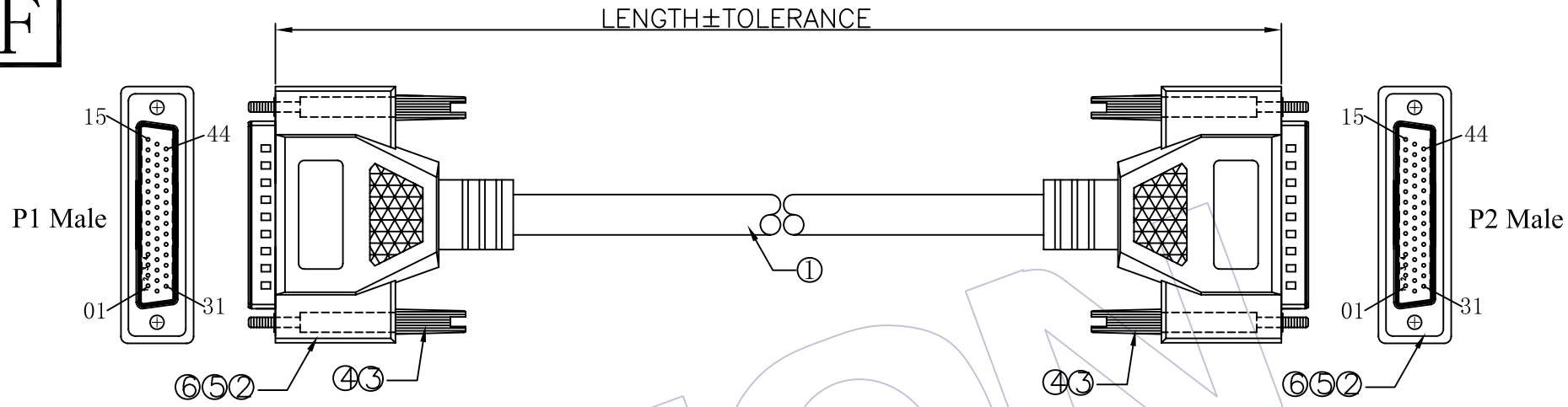

CONNECT METHOD

P1	P2	P1	P2	P1	P2
1	1	16	16	31	31
2	2	17	17	32	32
3	3	18	18	33	33
4	4	19	19	34	34
5	5	20	20	35	35
6	6	21	21	36	36
7	7	22	22	37	37
8	8	23	23	38	38
9	9	24	24	39	39
10	10	25	25	40	40
11	11	26	26	41	41
12	12	27	27	42	42
13	13	28	28	43	43
14	14	29	29	44	44
15	15	30	30	SHELL	SHELL

SPECIFICATIONS
Insulation Resistance:10MΩ Min
Contact Resistance:2.0Ω Max
Withstand Voltage:DC 300V, 10S
The Cable Assembly Must 100% Test

Wire SPEC	LENGTH	TOLERANCE
ULxxxx 22~30AWG	1~499	±5
	500~999	±10
	1000~1500	±15
	1501~3000	±20
	3001~5000	±30
	5001~	± Lx1%

Ordering Information

C9700 - 44 02 xxxx -001

- 44: No.of Pins: 44P
- 02: Shape Style: 02=Both ends Process
- xxxx: Length of Line

NO.	Part No.	Name	specification	Q'TY	UNIT
⑥	GPVC-B70XG01	Plastic	PVC 45P Black/Blue/Grey	0.026	KG
⑤	GPE-W00XG01	Plastic	PE WHITE	0.008	KG
④	GPVC-B60XG01	Plastic	PVC 35P Black/Blue/Grey	0.006	KG
③		Screw	4#-4UNC	4	PCS
②	6220-44MXXXX01	D-SUB	HDB44P MALE SOLDER TYPE Black/Blue	2	PCS
①	WXXXX-XXXX00001	Cable	UL2464/2919 22~30AWG*44C+D+AL/MYLAR PVC Jacket Black/Beige/Grey	XXX	MM

版次 REV	日期 DATE	变更说明 MODIFICATION DESCRIPTION	变更 CHANGE	核准 APPROVE
A0	09/11/02	NEW	———	———

工程图 ENGINEERING		绘图 DRAW	BEN	09/11/02
X.X	±0.30	设计 DESIGN		
X.XX	±0.20	审核 CHECK		
X.XXX	±0.10	核准 APPROVE		
Angle	± 2°			
DIM	TOL			

SCALE	Free
UNIT	mm
SIZE	A4
SHEET	1/1
PROJ.	

WCON 维峰五金电子有限公司 WAFE HARDWARE ELECTRONICS CO.LTD

料号 PART NO.	C9700-4402XXXX-001
品名 TITLE:	HDB 44P Male TO HDB44P Male
客户料号Customer NO.	